MEMS
Fiber Optical Variable Attenuator Ø 3.5 mm 2D

(850nm, 1260-1630nm, 500mW)

DATASHEET

BUY NOW

The VOAM Series of MEMS Fiber Optical Variable Attenuator is constructed using an electrostatic rotating mirror hermetically sealed with nitrogen, featuring high repeatability, low power consumption, and low cost. A voltage between 0-6 V on the drive pin sets the optical attenuation. When power is removed, the VOA returns to its default state. The device's electrical character is capacitive without polarity. It can be mounted directly on printed circuit boards. The VOAMs are bidirectional. The component is compliant with RoHS requirements and Telcordia standards GR1221 qualified.

Agiltron provides customized designs and modular assemblies to meet control and integration applications.

Features

- High Repeatability
- Low Power
- Small
- Fast Response ~0.3ms

Specifications

Parameter		Min	Typical	Max	Unit
Operation Wavelength	Single Mode	1250		1650	nm
	Multimode	810-890	1260-1360	1500-1600	
Insertion Loss [1], [2]			0.5	1.0	dB
PDL (SM)				0.3	dB
Repeatability (0-30, @15dB)			0.1	0.2	dB
Wavelength Dependent Loss (@20dB)				0.63	dB
Extinction Ratio (PM fiber)		18		30 [3]	dB
Repeatability (@10dB, 0-60 °C)	Uncompensated		0.3	0.5	dB
	Compensated		0.1	0.2	
Return Loss	SM, PM	50			dB
	MM	35			
Attenuation	SM, PM	40			dB
	MM	30			dB
Driving Voltage	SM, PM	0		7	V
	MM	0		9	
Response Time			2	10	ms
Repetition Rate			50	100	Hz
Durability			10^{12}		Cycle
Power Consumption (at maximum)				0.2	mW
ESD				500	V
Operating Temperature [4]		-10		70	°C
Storage Temperature		-40		85	°C
Optical Power Handling			300	500	mW

Notes:

[1]. Excluding connectors. Each connector adds 0.3dB

[2]. Multimode IL measured @ Light Source CPR < 14dB

[3]. 30dB PER is available with special order

[4]. Lower temperature version is available, please call us

Legal notices: All product information is believed to be accurate and is subject to change without notice. Information contained herein shall legally bind Agiltron only if it is specifically incorporated into the terms and conditions of a sales agreement. Some specific combinations of options may not be available. The user assumes all risks and liability whatsoever in connection with the use of a product or its application.

Rev 01/24/24

Information contained herein is deemed to be reliable and accurate as of the issue date. Photonwares reserves the right to change the design or specifications at any time without notice.
Agiltron is a registered trademark of Photonwares Corporation in the U.S. and other countries.

MEMS
Fiber Optical Variable Attenuator Ø 3.5 mm 2D

(850nm, 1260-1630nm, 500mW)

DATASHEET

Mechanical Dimensions (mm)

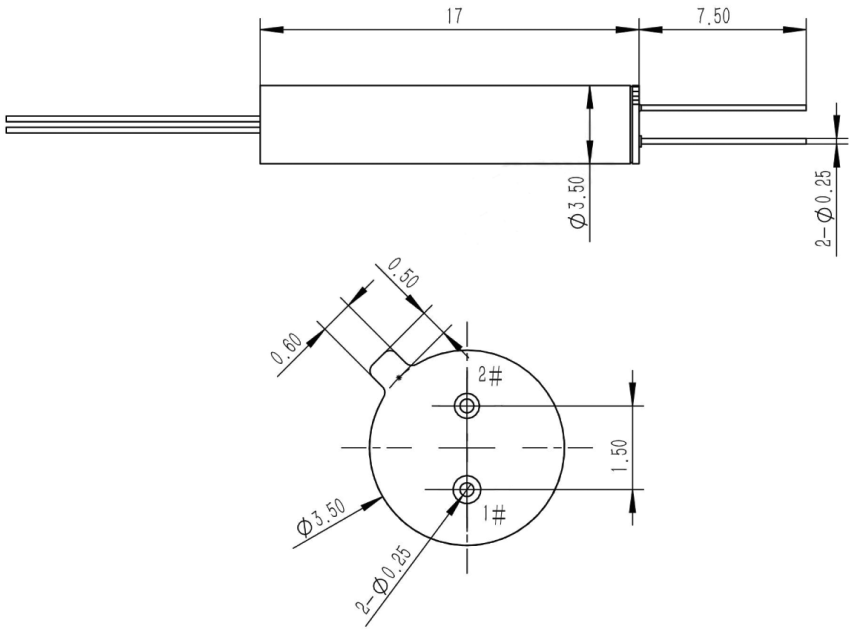

Pin number	Description
1	GND
2	Anode

*Product dimensions may change without notice. This is sometimes required for non-standard specifications.

Electrical Driving Requirements

1) Capacitive load device, no polarity.
2) The maximum rating voltage is 100V

Information contained herein is deemed to be reliable and accurate as of the issue date. Photonwares reserves the right to change the design or specifications at any time without notice.
Agiltron is a registered trademark of Photonwares Corporation in the U.S. and other countries.

MEMS
Fiber Optical Variable Attenuator Ø 3.5 mm 2D

(850nm, 1260-1630nm, 500mW)

DATASHEET

Typical Attenuation vs. Voltage at 25ºC, 55ºC, 70ºC

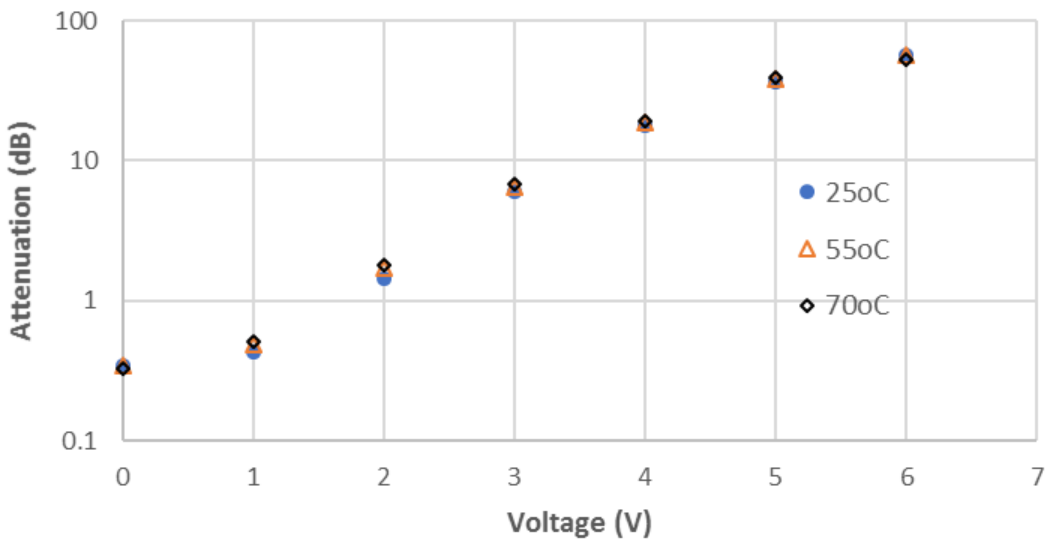

Typical Insertion Loss vs Wavelength (1240-1630nm)

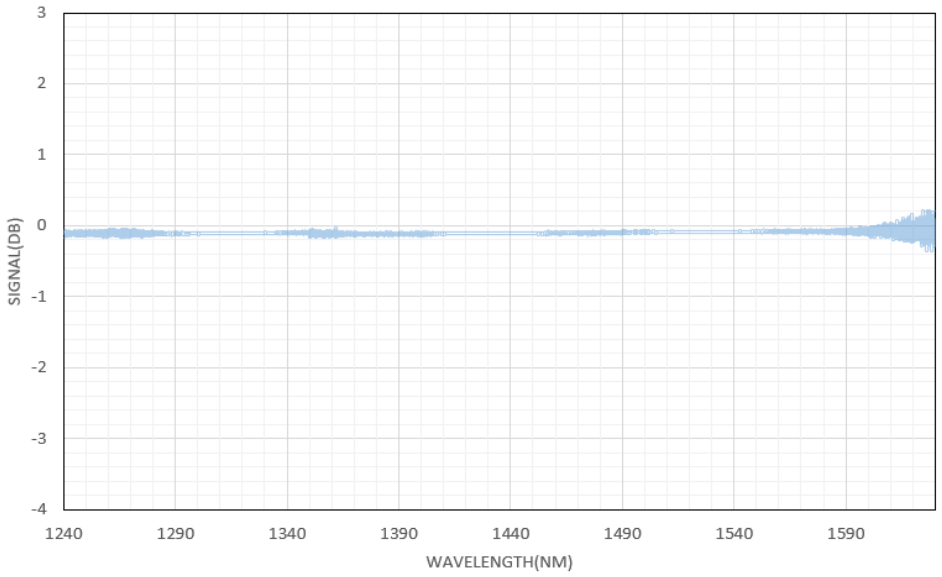

Information contained herein is deemed to be reliable and accurate as of the issue date. Photonwares reserves the right to change the design or specifications at any time without notice.
Agiltron is a registered trademark of Photonwares Corporation in the U.S. and other countries.

Wavelength Dependence 10 dB

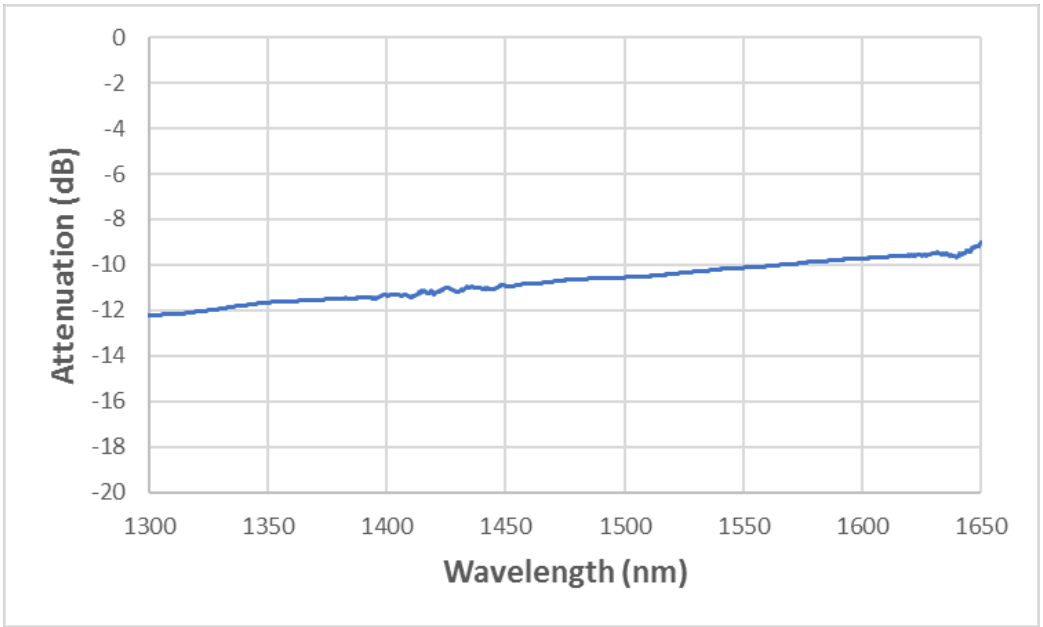

Wavelength Dependence 0.5 dB

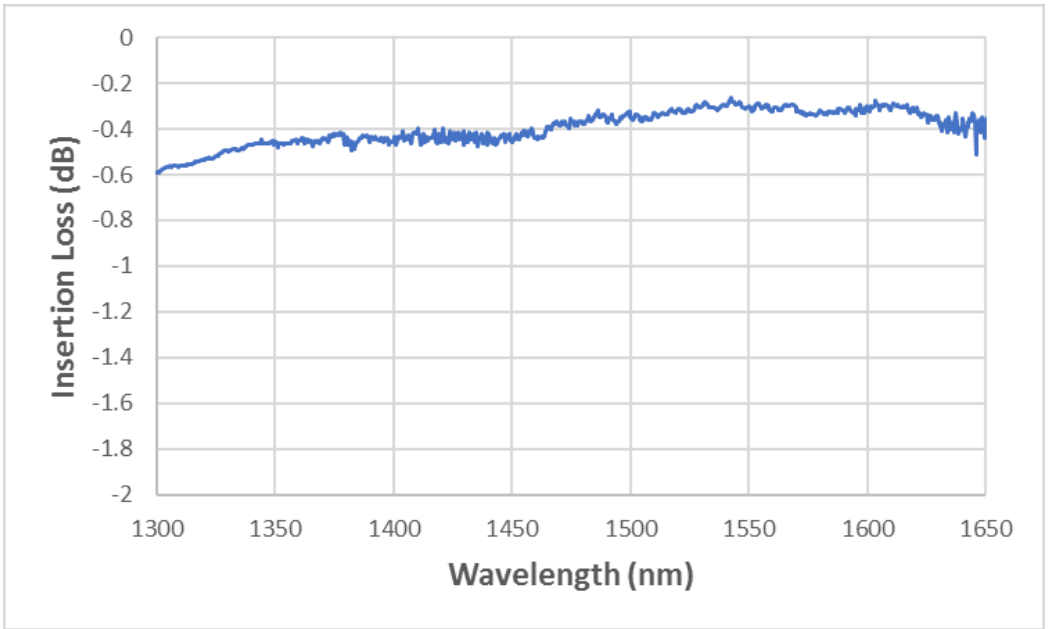

Information contained herein is deemed to be reliable and accurate as of the issue date. Photonwares reserves the right to change the design or specifications at any time without notice.
Agiltron is a registered trademark of Photonwares Corporation in the U.S. and other countries.

MEMS
Fiber Optical Variable Attenuator Ø 3.5 mm 2D

(850nm, 1260-1630nm, 500mW)

DATASHEET

Typical Voltage Variable Attenuation Repeatability over 5days (5 colors)

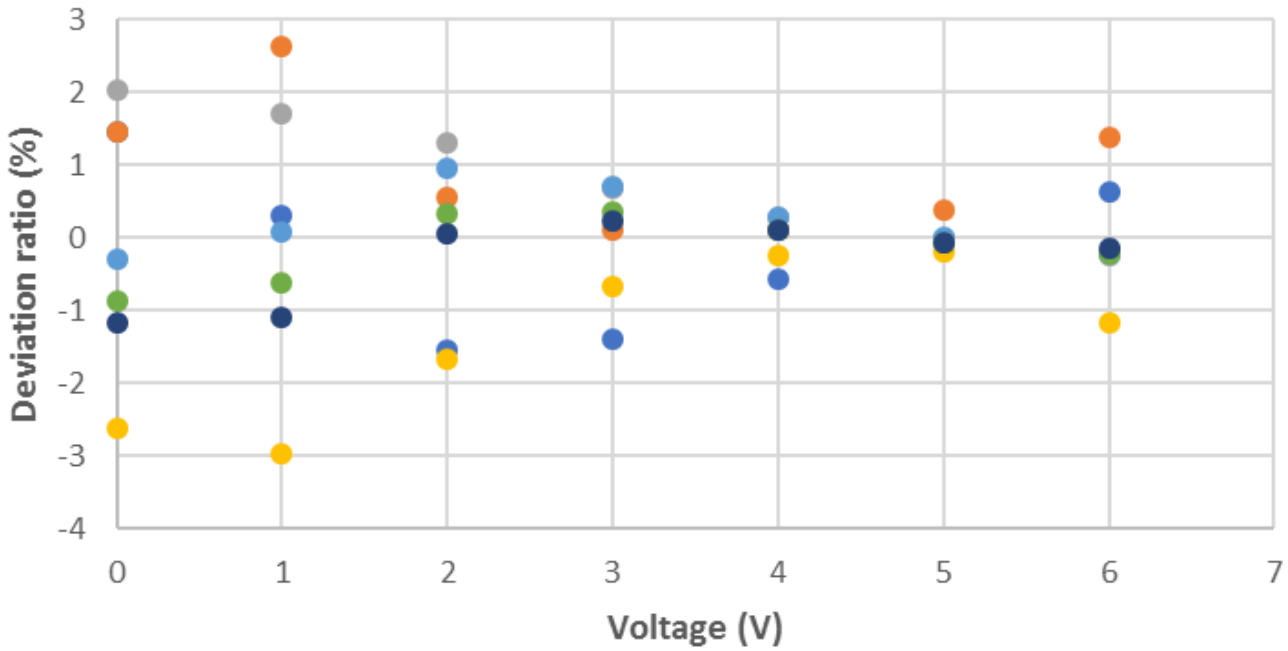

Ordering Information

	☐	☐	3	☐	☐	☐	☐	☐	☐
Prefix	**Non-Power State**	**Wavelength**	**Package**	**Type**	**Compensation**	**Fiber Type**	**Fiber Cover**	**Fiber Length**	**Connector**
VOAM-	Transparent = T Opaque =O	1260~1620 = B 1310 = 3 1550 = 5 850 = 8 850/1310 = A Special = 0	Ø 3.5mm = 3	Standard = 1 Special = 0	Non = 1 Yes = 2	SMF-28 = 1 PM 1500 = B MM 50/125 = 5 MM 62.5/125 = 6 PM 1300 = D PM 980 = E PM 850 = F Special = 0	Bare fiber = 1 Special = 0	0.5m = 2 1.0m = 3 Special = 0	None = 1 FC/PC = 2 FC/APC = 3 SC/PC = 4 SC/APC = 5 LC/PC = 7 LC/APC = A LC/UPC = U Special = 0

NOTE:

"**transparent**" means no attenuation without applying a controlling voltage, the "**opaque**" means the highest attenuation without applying a controlling voltage.

Information contained herein is deemed to be reliable and accurate as of the issue date. Photonwares reserves the right to change the design or specifications at any time without notice.
Agiltron is a registered trademark of Photonwares Corporation in the U.S. and other countries.

Application Notes

Fiber Core Alignment
Note that the minimum attenuation for these devices depends on excellent core-to-core alignment when the connectors are mated. This is crucial for shorter wavelengths with smaller fiber core diameters that can increase the loss of many decibels above the specification if they are not perfectly aligned. Different vendors' connectors may not mate well with each other, especially for angled APC.

Fiber Cleanliness
Fibers with smaller core diameters (<5 µm) must be kept extremely clean, contamination at fiber-fiber interfaces, combined with the high optical power density, can lead to significant optical damage. This type of damage usually requires re-polishing or replacement of the connector.

Maximum Optical Input Power
Due to their small fiber core diameters for short wavelength and high photon energies, the damage thresholds for device is substantially reduced than the common 1550nm fiber. To avoid damage to the exposed fiber end faces and internal components, the optical input power should never exceed 20 mW for wavelengths shorter 650nm. We produce a special version to increase the how handling by expanding the core side at the fiber ends.

Information contained herein is deemed to be reliable and accurate as of the issue date. Photonwares reserves the right to change the design or specifications at any time without notice.
Agiltron is a registered trademark of Photonwares Corporation in the U.S. and other countries.